REVISIONS					
ECO	REV	DESCRIPTION	CHECKED	APPROVED	DATE
85-73	01	INITIAL RELEASE		M. SMITH	2/27/04
85-80	A	RELEASE FOR BUILD			

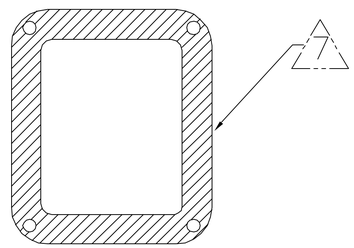

VIEW A-A

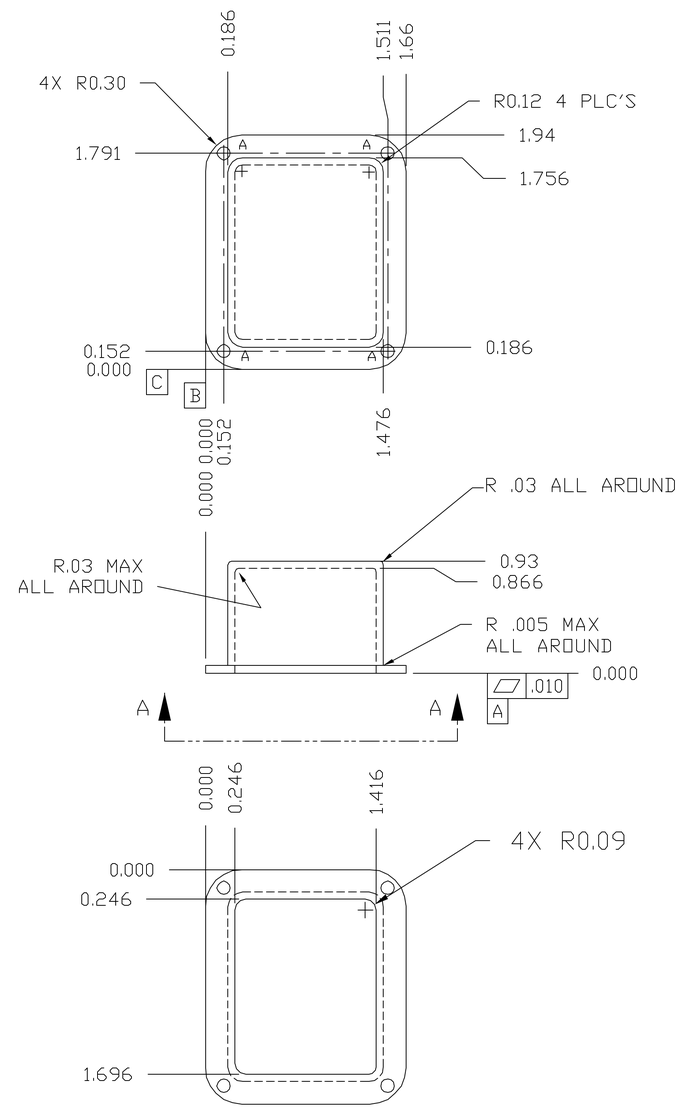

HOLE CHART			
HOLE	QTY	TOLERANCE	DESCRIPTION
A	4	⊕ ø.010 Ⓜ C A B	ø.120 ±.003 THRU

NOTES:
1. ALL DIMENSIONS ARE IN INCHES.
2. CLEANLINESS REQUIREMENTS PER SN-C-0005 LEVEL "VC-SENSITIVE".
3. BAG AND TAG WITH P/N AND REV.
4. ANODIZE PER NASA/JSC PRC-5006, TYPE II, CLASS 2, COLOR BLACK.
5. DEBUR AND BREAK SHARP EDGES.
   FILLET RADIUS .02 MAX.
6. UNTOLERANCED DIMENSION LOCATING TRUE POSITION ARE BASIC.
7. MASK FROM ANODIZED FINISH. CONVERSION COAT PER MIL-C-8625, CLASS 3.

85-40500	VOILA
NEXT ASSEMBLY	USED ON
APPLICATION	

UNLESS OTHERWISE SPECIFIED
DIMENSIONS ARE IN INCHES
TOLERANCE: ANGLES +/- 1°
3 PLACE DECIMALS +/- .005
2 PLACE DECIMALS +/- .01

MATERIAL: ALUM 6061 T6
FINISH: NOTE 4, 7

	NAME	DATE
DRAWN	M. SMITH	3/7/04
CHECKED		
APPROVED		
RELEASED		
CAD FILE		

Massachusetts Institute ofTechnology
Center for Space Research
VOILA

COVER, I.C PROTECTIVE,
PADDLE ASSY

SIZE	FSCM NO.	DWG NO.	REV
D	80230	85-40506	A

SCALE 1:1 SHEET 1 OF 1