REVISIONS				
ECO	REV	DESCRIPTION	DATE	APPROVED
85-029	01	INITIAL RELEASE		

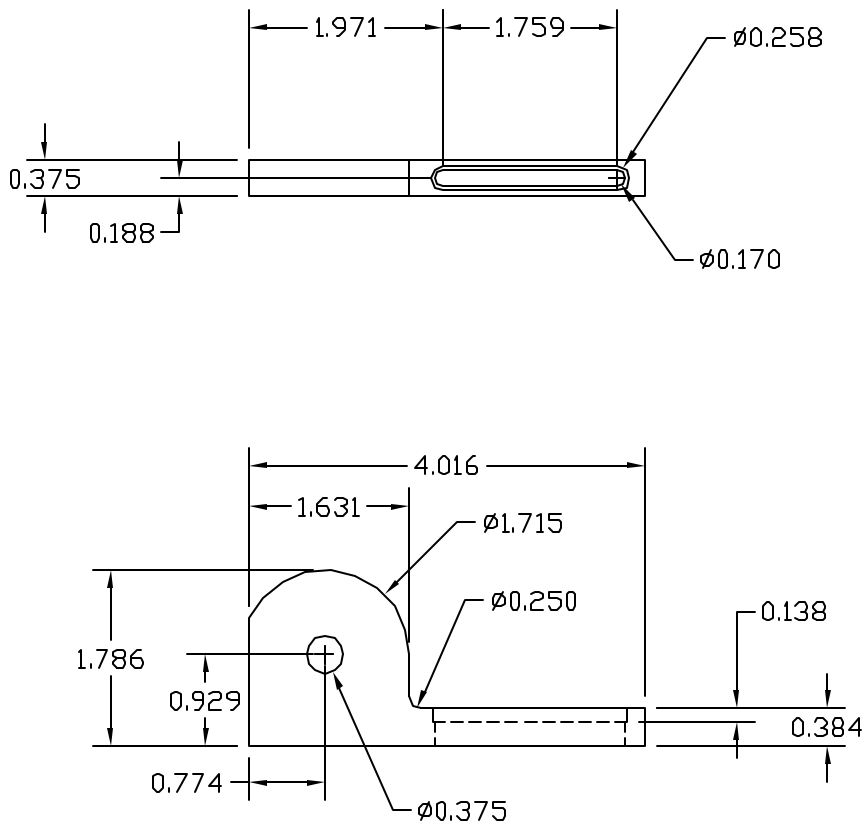

NOTES:
1. ALL DIMENSIONS ARE IN INCHES.
2. CLEANLINESS REQUIREMENTS PER SN-C-0005 LEVEL GC.
3. PERMANENT INK STAMP PN IN .12 HIGH CHARACTERS WITH ITEM XXX LOCATE APPROXIMATELY WHERE SHOWN.
4. CHEMFILM PER MIL-C5541, CLASS 3
5. INSTALL INSERTS PER MS33537. REMOVE TANG.
6. RADIUS ALL EDGES AND CORNERS .04- .06. FILLET RADIUS .02 MAX.

85-25108	VOILA
NEXT ASSEMBLY	USED ON
APPLICATION	

UNLESS OTHERWISE SPECIFIED
DIMENSIONS ARE IN INCHES
TOLERANCE: ANGLES +/- 1°
3 PLACE DECIMALS +/- .005
2 PLACE DECIMALS +/- .01

MATERIAL
6061 T6 AL

NOTE 4
FINISH

		DATE
NAME		
DRAWN	M. SMITH	
CHECKED		
APPROVED		
RELEASED		
CAD FILE	25102_r01	

Massachusetts Institute of Technology
Center for Space Research
VOILA

BRACKET, BOTTOM
MOUNTING, RIGHT,
ENGINEERING UNIT

SIZE	FSCM NO.	DWG NO.	REV
C	80230	85-25102	01
SCALE 1:1		SHEET 1 OF 1	