REVISIONS					
ECO	REV	DESCRIPTION	CHECKED	APPROVED	DATE
85-94	01	INITIAL RELEASE			
85-152	A	FIRST BUILD UPDATES			

DEPLOYED

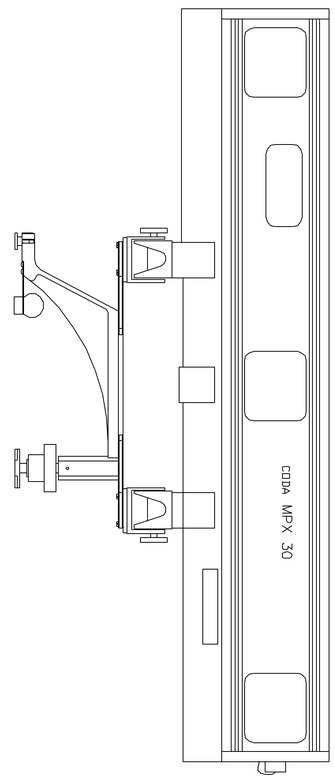

STOWED

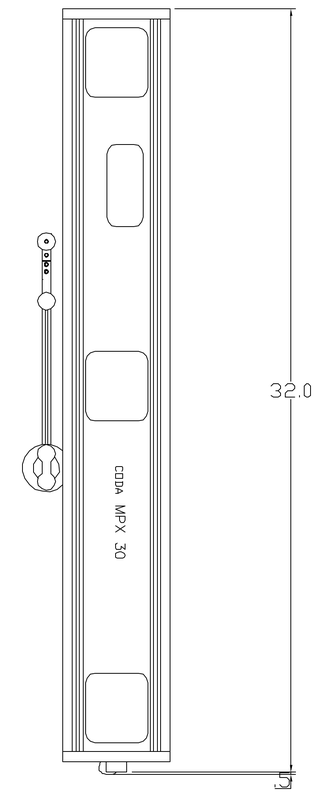

NOTES
1. TRACKER BAR ROTATES AROUND THE SWIVEL AT A RADIUS OF 7.2 INCHES.

2. THE TRACKER CAN ROTATE FROM THE CLOSED (STOWED) POSTION TO A MAXIMUM OF 321°.

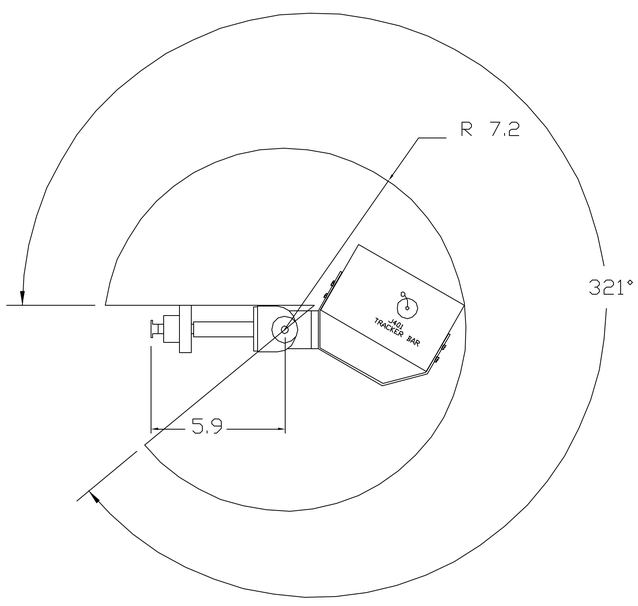

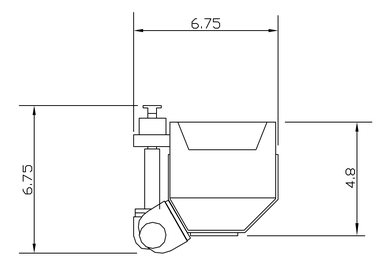

		UNLESS OTHERWISE SPECIFIED DIMENSIONS ARE IN INCHES TOLERANCE: ANGLES +/- 1° 3 PLACE DECIMALS +/- .005 2 PLACE DECIMALS +/- .01	NAME	DATE
			DRAWN M. SMITH	4/7/04
			CHECKED	
		MATERIAL N/A	APPROVED	
	VOILA	N/A	RELEASED	
NEXT ASSEMBLY	USED ON	FINISH		
APPLICATION		WEIGHT 14.5-15.0 LBS	CAD FILE	

Massachusetts Institute ofTechnology
Center for Space Research
VOILA

ICD
TRACKER BAR

SIZE	FSCM NO.	DWG NO.	REV
D	80230	85-20100.99	A

SCALE 1:1 SHEET 1 OF 1