REVISIONS					
REV.	ECO NO.	DESCRIPTION	CHECKED	APPROVED	DATE
A	85-093	Initial Release	RFG	RF	5/5/04
B	85-146	Show Intersense Cube as modified assy. RT1 WAS R1, show connected to bonded-terminal-strip. Delete TB-1 & connect Mrk Box directly to J802. Delete "Mounted" in drawing title.	RFG	RF	9/28/04
C	85-170	P601 & J601 were P802 & J802 respectively & 15-pin Dsubs. Show BTS-9 & 10. TMP_HMD+/- was TP-26. Change NOTE 2 to sheath only the HMD_IC1_BUS with copper braid. IC1 "VIO" conductor was labeled HMD_IMU_5.	RGF	RF	1/5/05

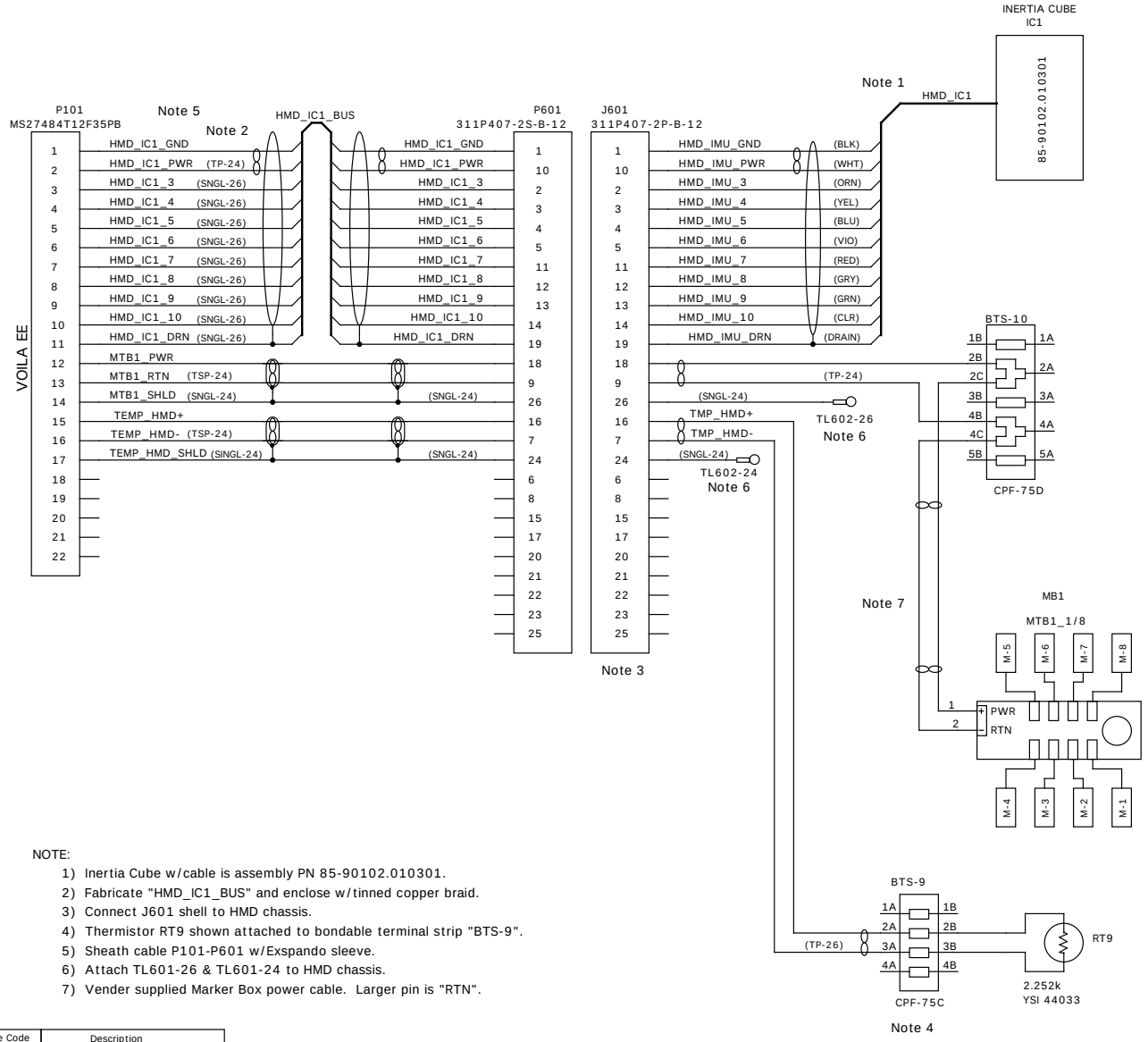

NOTE:

1) Inertia Cube w/cable is assembly PN 85-90102.010301.
2) Fabricate "HMD_IC1_BUS" and enclose w/tinned copper braid.
3) Connect J601 shell to HMD chassis.
4) Thermistor RT9 shown attached to bondable terminal strip "BTS-9".
5) Sheath cable P101-P601 w/Exspando sleeve.
6) Attach TL601-26 & TL601-24 to HMD chassis.
7) Vender supplied Marker Box power cable. Larger pin is "RTN".

Type Code	Description
SNGL-26	Single Cond, #26 AWG
SNGL-24	Single Cond, #24 AWG
SNGL-22	Single Cond, #22 AWG
TP-24	Twisted Pair, #24 AWG
TP-22	Twisted pair, #22 AWG
TT-24	Twisted Triple, #24 AWG
TSP-24	Twisted Shield Pr, #24 AWG
TSP-22	Twisted Shield Pr, #22 AWG
TST-24	Twisted Shield Triple, #24 AWG
Coax	COAX, #24 AWG
Shld	Braid, tinned copper

		NAME	DATE
		DRAWN M. Doucette	03/30/04
		CHECKED R.Goeke	5/5/04
85-40100	VOILA	APPROVED R.Foster	5/5/04
NEXT ASSEMBLY	USED ON	RELEASED D.Gage	5/5/04
APPLICATION			

MASSACHUSETTS INSTITUTE OF TECHNOLOGY
CENTER FOR SPACE RESEARCH

Schematic
VOILA
Head Display Sensors

SIZE	CODE IDENT NO.	DRAWING NO.	REV.
A	80230	85-03020.07	C
SCALE		SHEET 1 OF 1	