REV	ECO NO.	DESCRIPTION	DRAWN	APPROVED	DATE
A	31-CR	[illegible]			

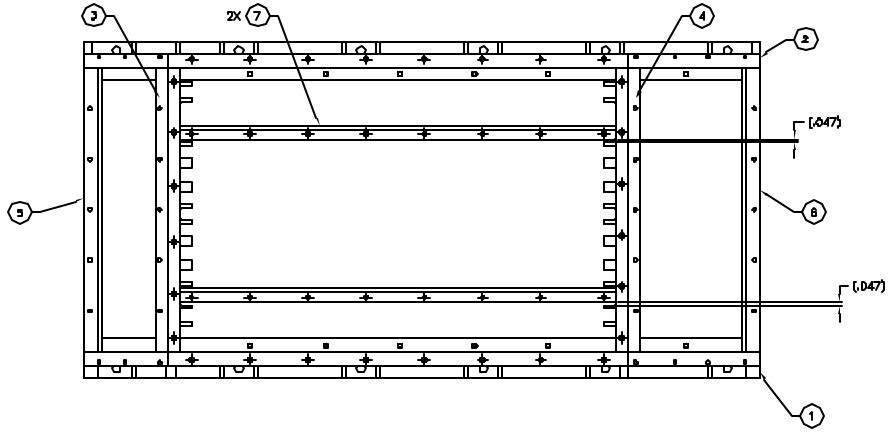

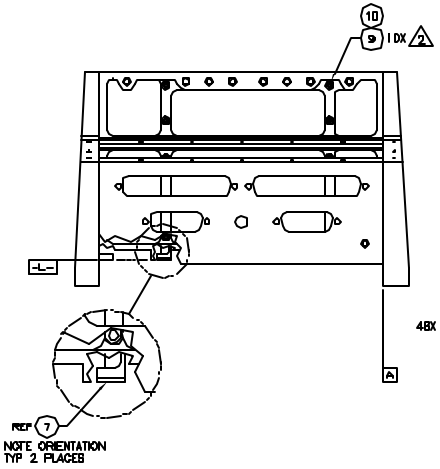

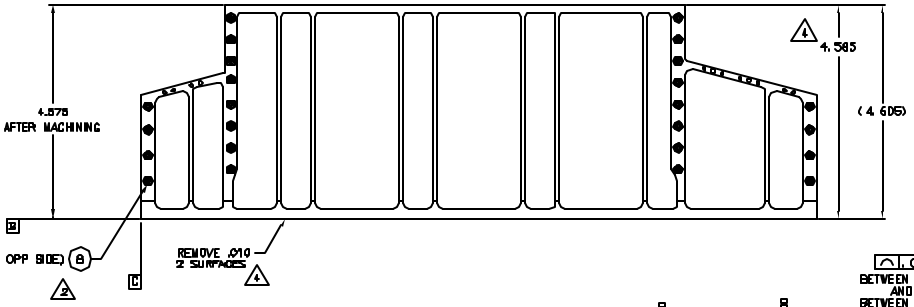

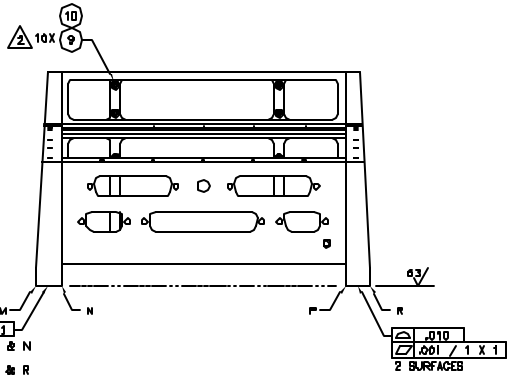

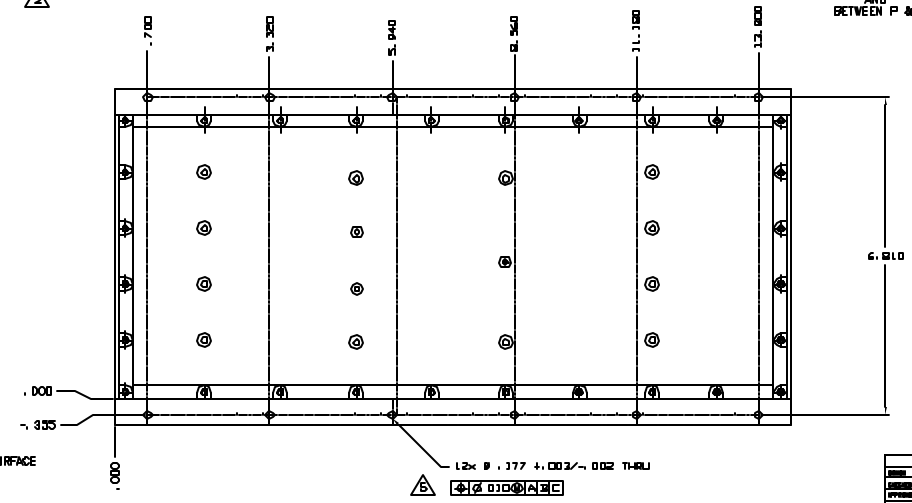

NOTES:

1. FINISH: CHEMICAL CONVERSION COAT ALL MACHINED SURFACES PER MIL-C-5541, CLASS 3.

2. TORQUE F/N 8 & 9 TO 34 IN-OZ.

3. SPOTBOND ALL HARDWARE AFTER INSTALLATION.

4. MACHINE TOP SURFACE TO 4.585 PRIOR TO REMOVING .010 FROM THE BOTTOM SURFACE.

5. DRILL HOLES AFTER MACHINING TOP SURFACE BUT BEFORE MACHINING BOTTOM SURFACE

6. UNTOLERANCED DIMENSIONS LOCATING TRUE POSITION ARE BASIC

DRAWN	M. SMITH	2-3-02
CHECKED		
APPROVED		
RELEASED		
MATERIAL		

UNLESS OTHERWISE SPECIFIED
DIMENSIONS SHALL BE INTERPRETED PER ANSI Y14.5 - 1982
DIMENSIONS ARE IN INCHES
TOLERANCES: ANGLES ±1°
3 PLACE DECIMALS ±.005
2 PLACE DECIMALS ±.01
THIRD ANGLE PROJECTION

MASSACHUSETTS INSTITUTE OF TECHNOLOGY
CENTER FOR SPACE RESEARCH
CAMBRIDGE MA 02139

CARD CAGE ASSEMBLY

SIZE	CODE IDENT NO.	DWG NO.	REV
E	80230	30-20600	A

SCALE 1:1 SHEET 1 OF 1